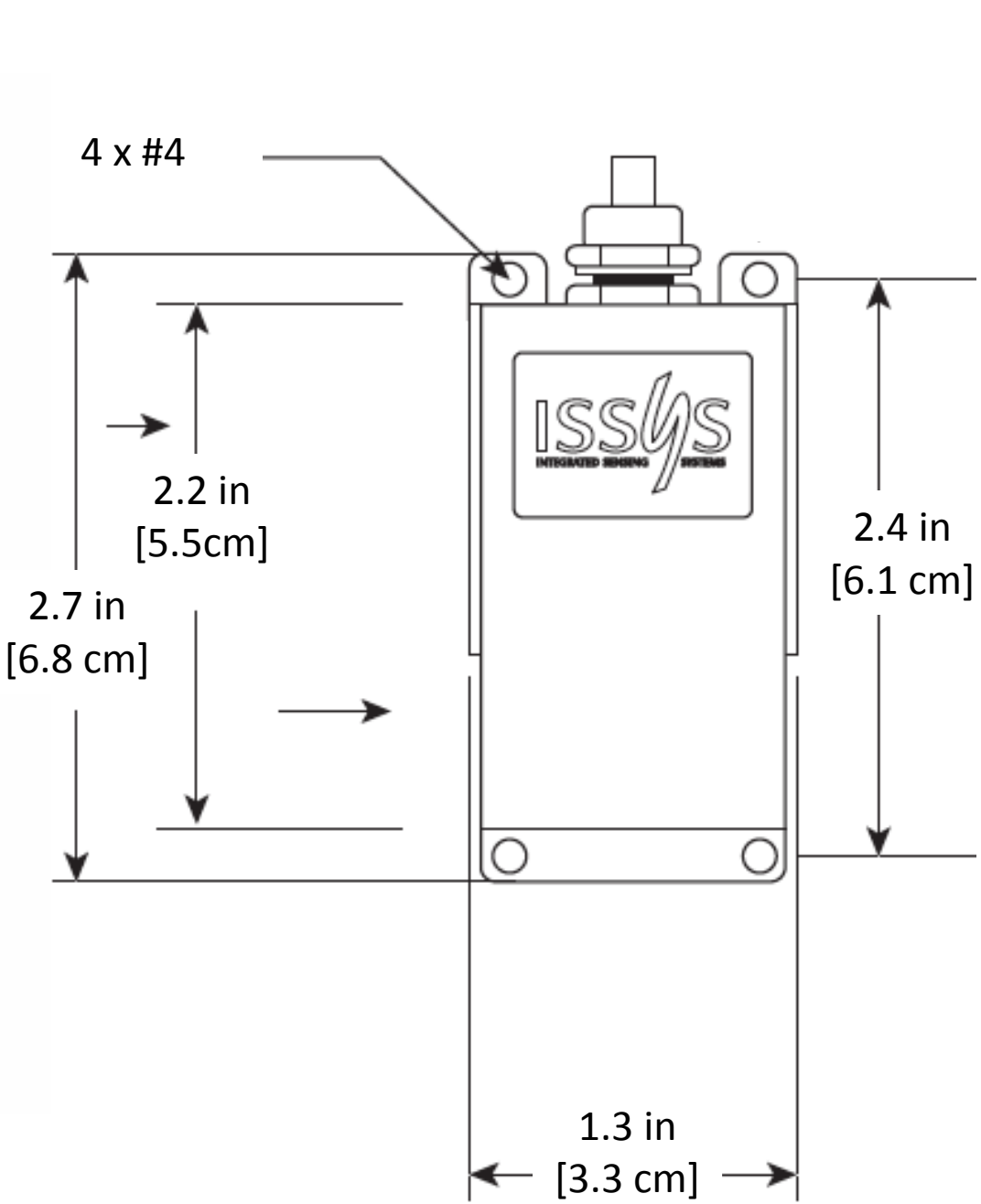
4 x #4
2.2 in
[5.5cm]
2.7 in
[6.8 cm]
2.4 in
[6.1 cm]
1.3 in
[3.3 cm]

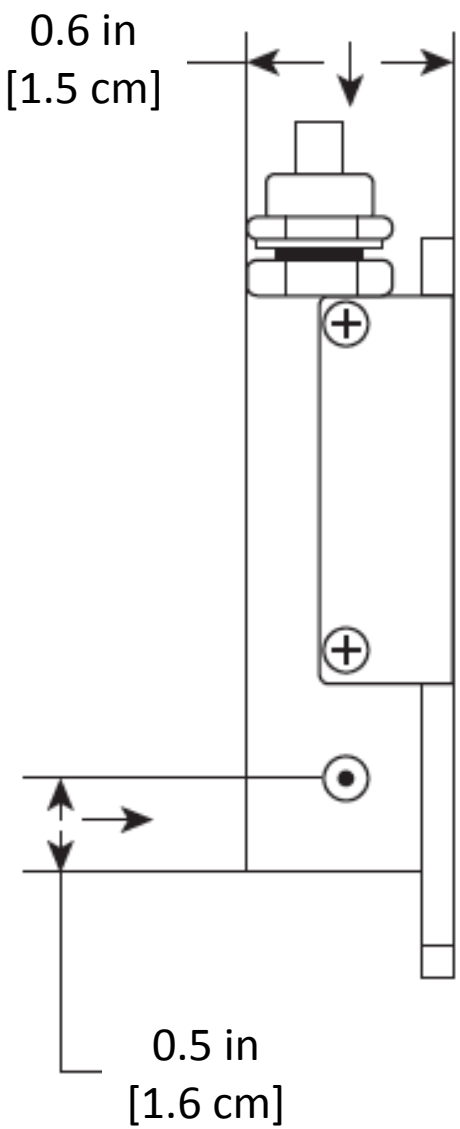
0.6 in
[1.5 cm]
0.5 in
[1.6 cm]